GRAPHITE

EXPLORE YOUR SKILLS

59G471

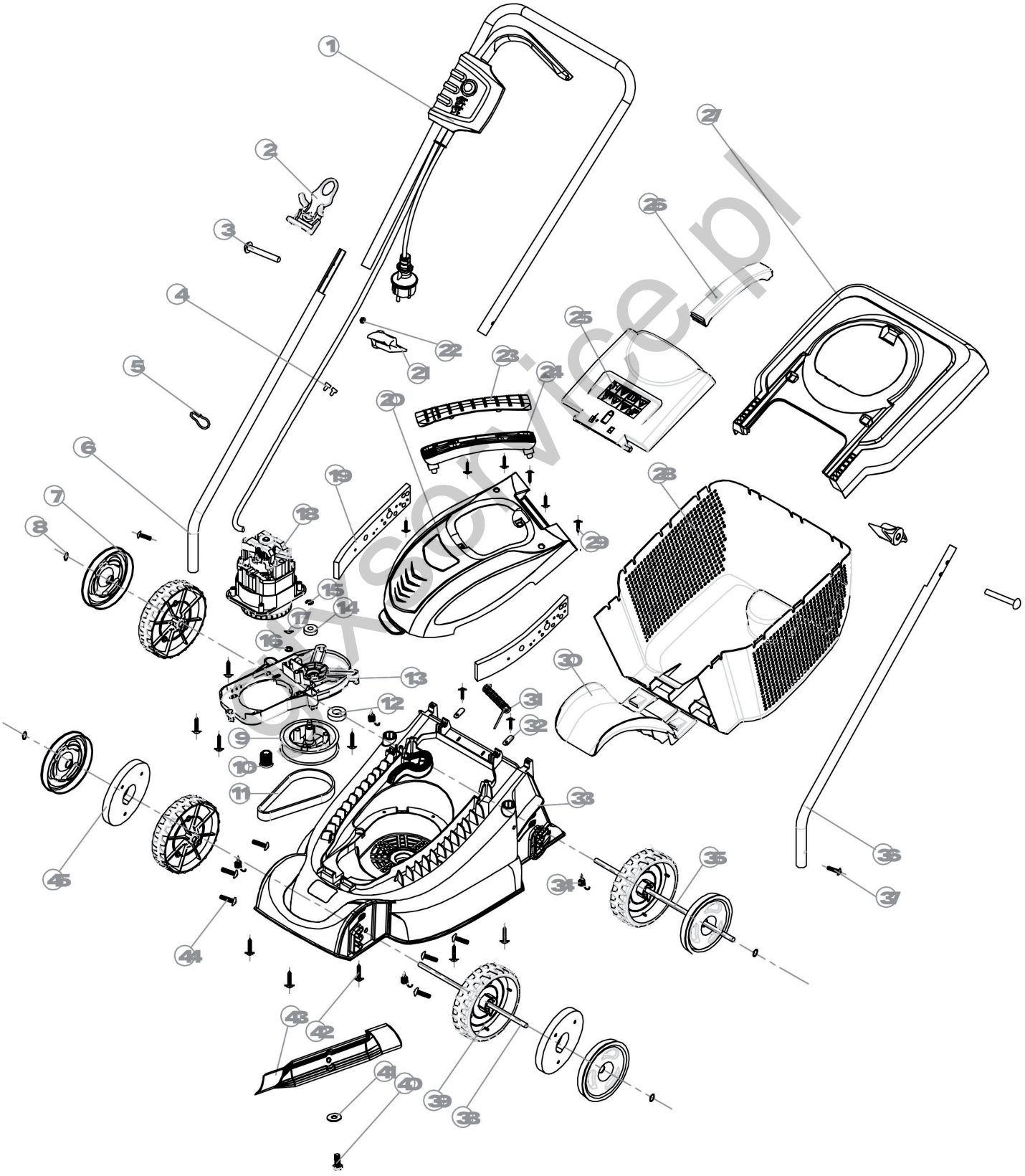

eXservice.pl