3 601 JA5 400

Stand ~~09-12~~
Issue 10-01-29

Fig./Abb. 1

Anzugsmomente
Torque values
Couple de serrage
Pares de apriete

Pos	40	=	0,5 - 0,8 Nm
	101	=	0,8 - 1,0 Nm
	105	=	1,7 - 2,0 Nm
	107	=	4,0 5,0 Nm

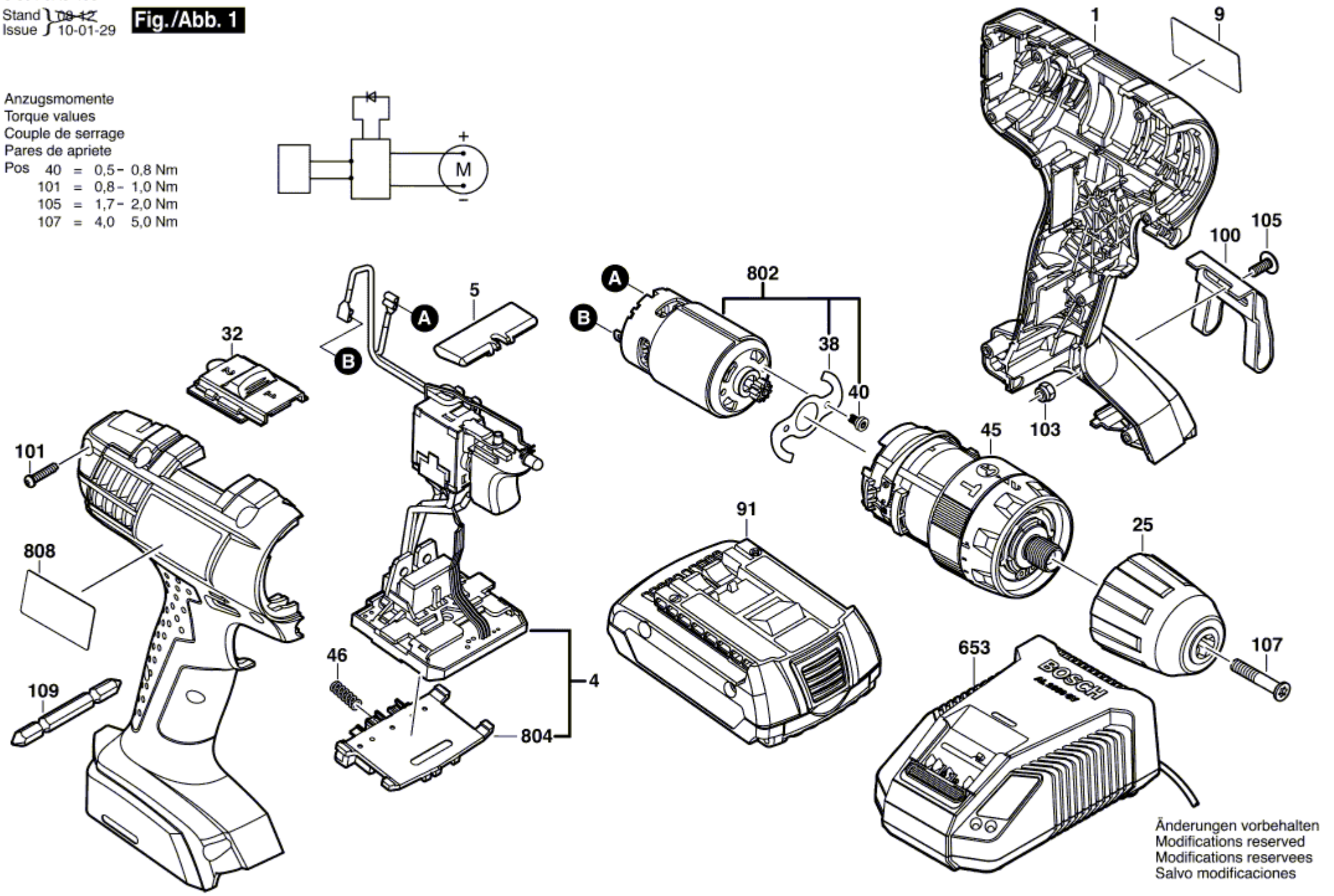

Änderungen vorbehalten
Modifications reserved
Modifications reservees
Salvo modificaciones