NEO TOOLS

04-618

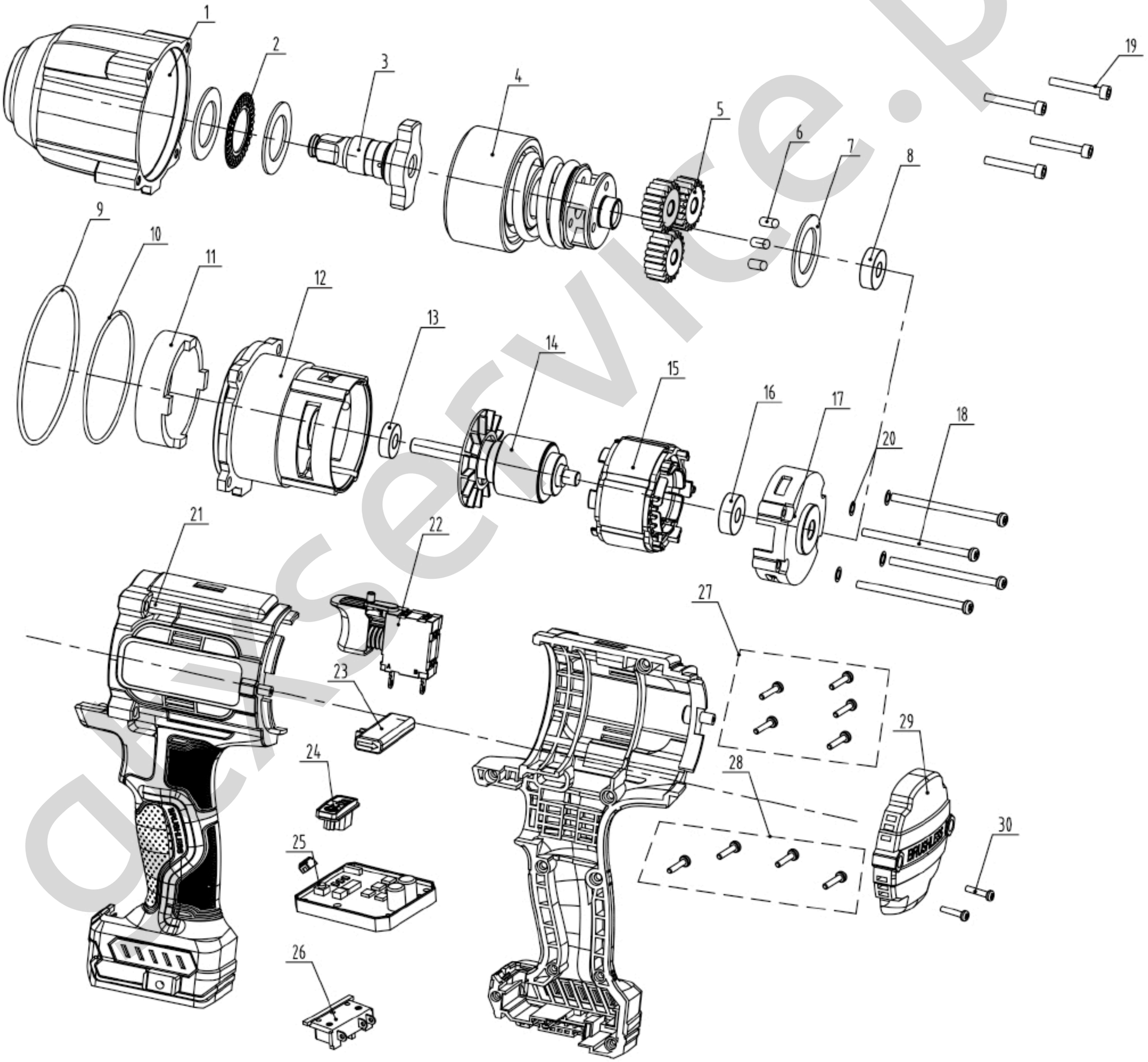

alxservice.pl