GRAPHITE

58GE142-1

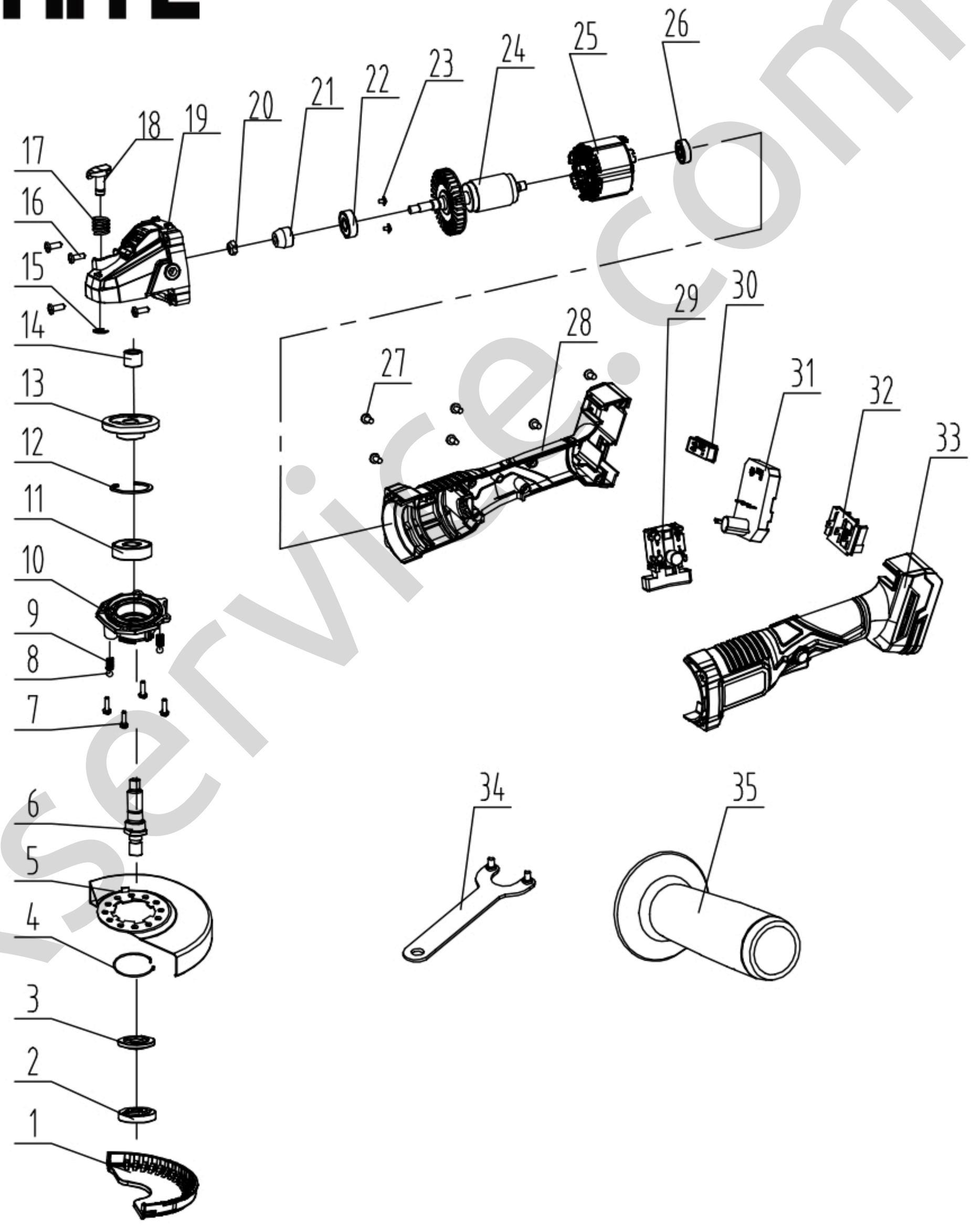

gtxservice.com