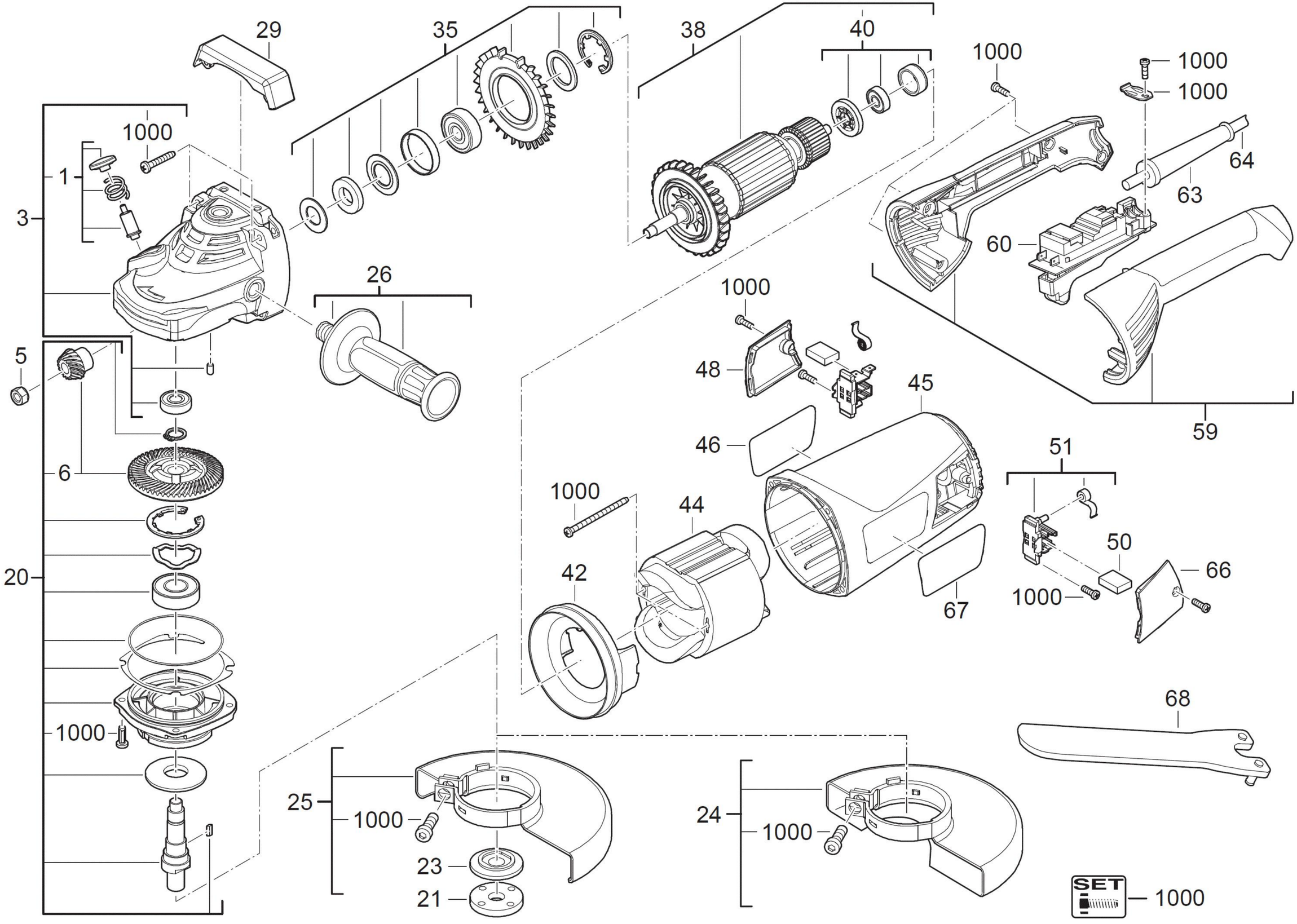
29
35
38
40
1000
1000
1000
1000
1
3
64
63
60
26
1000
5
48
45
59
46
51
6
1000
44
50
66
20
42
1000
67
68
1000
25
1000
24
1000
23
21
SET
1000