Typ ISP iPulse 1200 - 1600W
Stand
Issue 01/2018

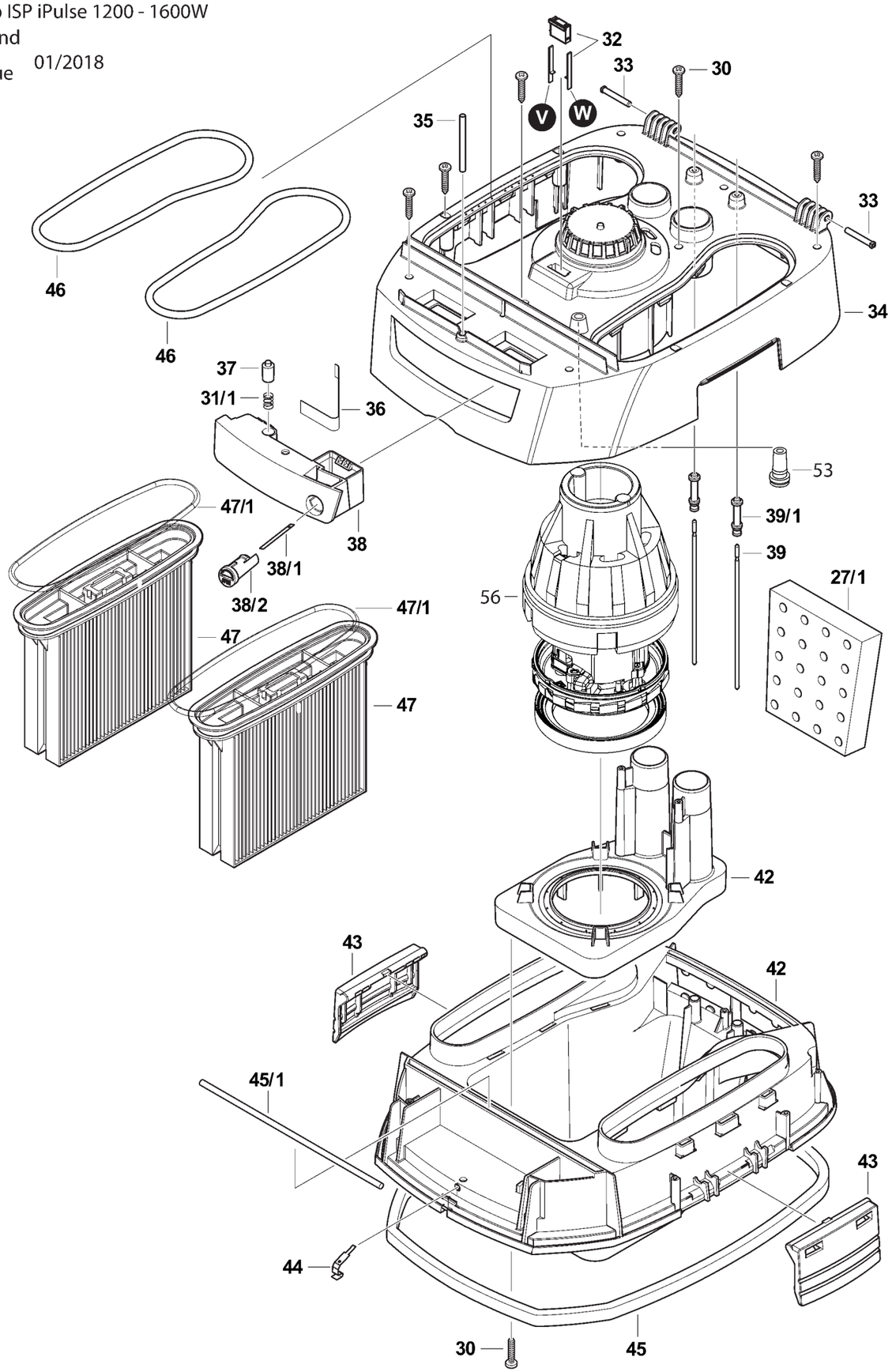
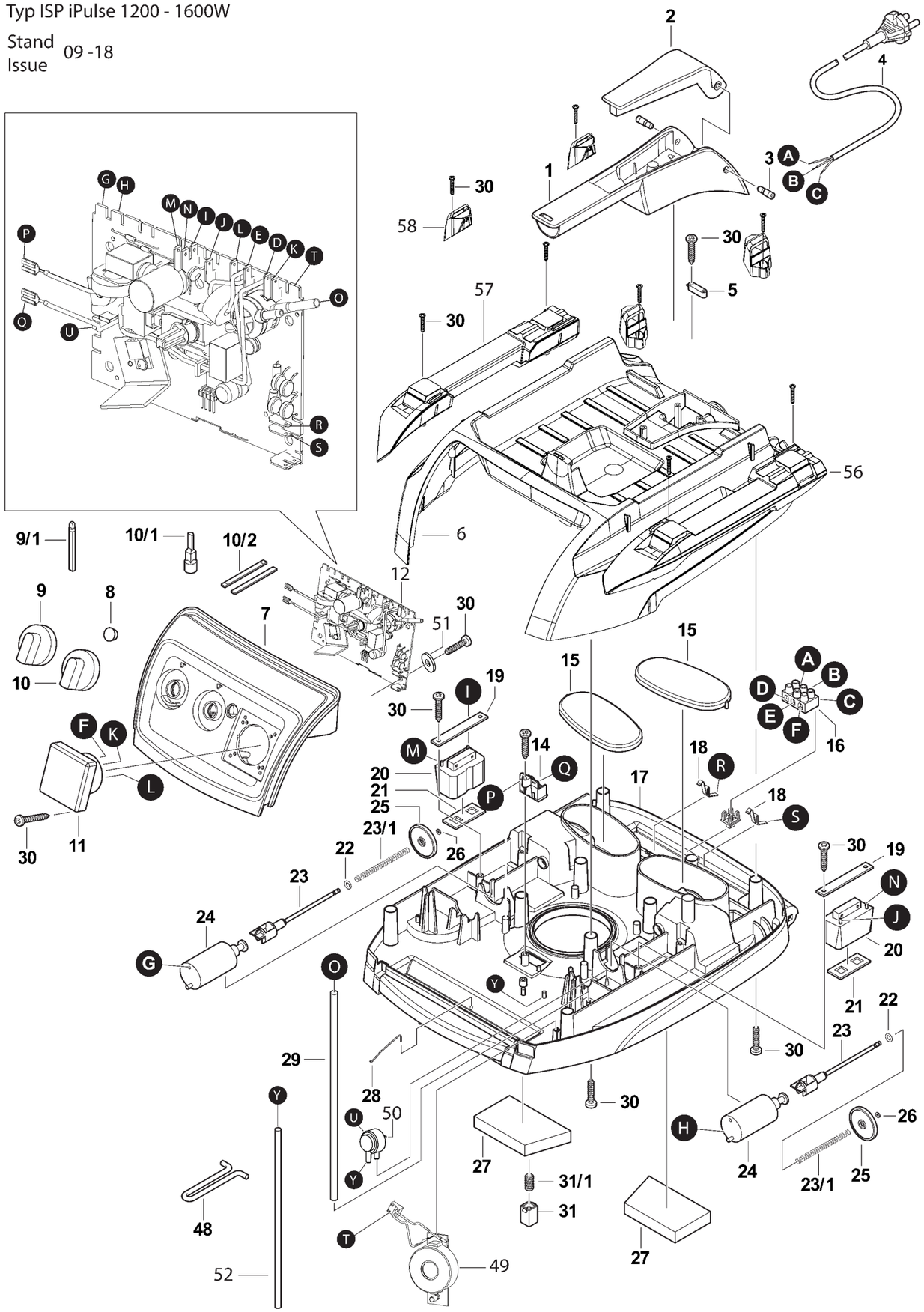
Typ ISP iPulse 1200 - 1600W
Stand
Issue 09 -18