3 600 H85 D02

Stand ~~22-10~~
Issue 22-11-23
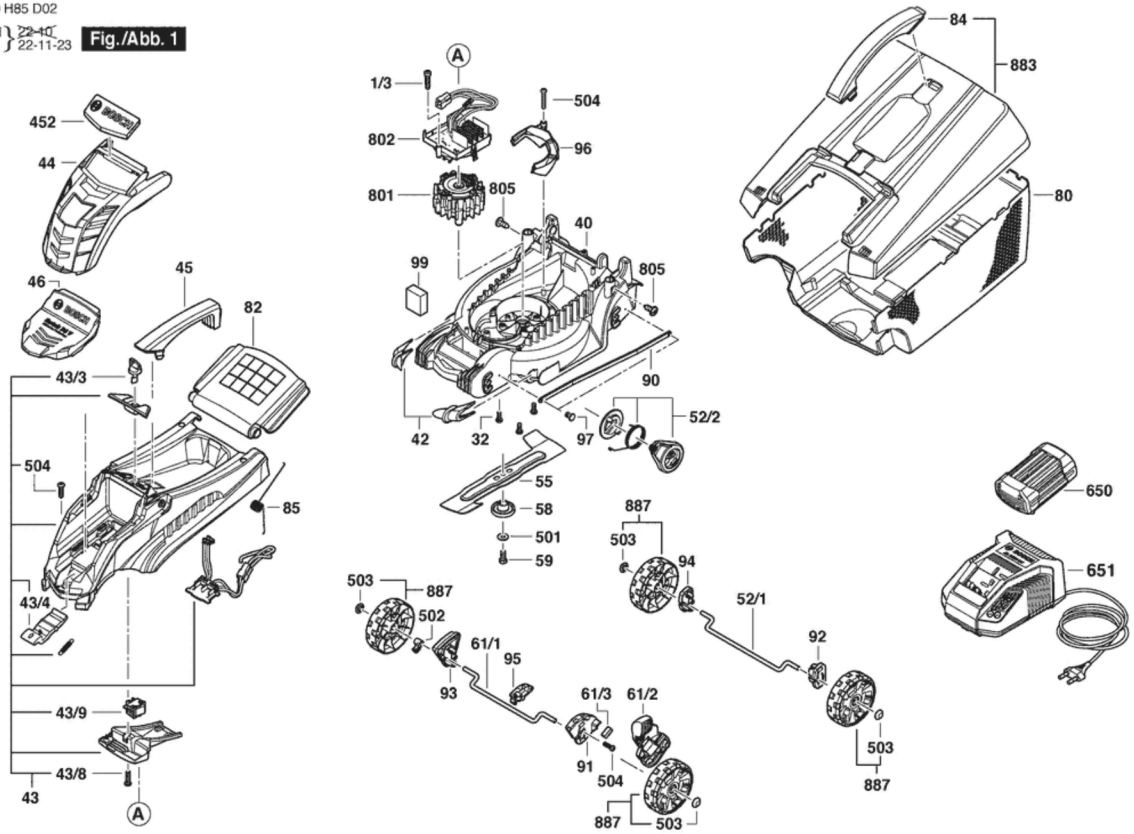
Fig./Abb. 1