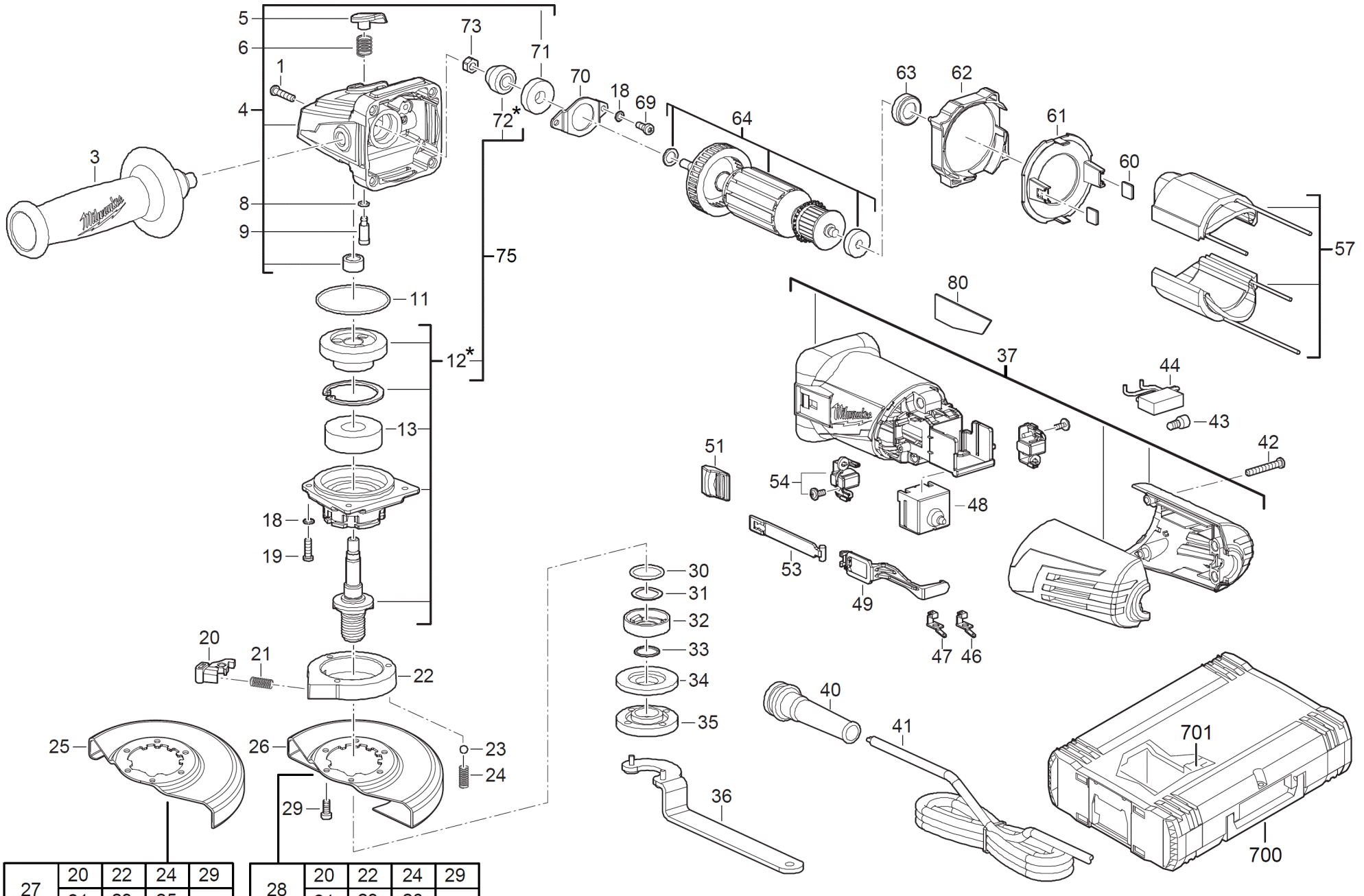

27	20	22	24	29
	21	23	25	

28	20	22	24	29
	21	23	26	

* While stock lasts