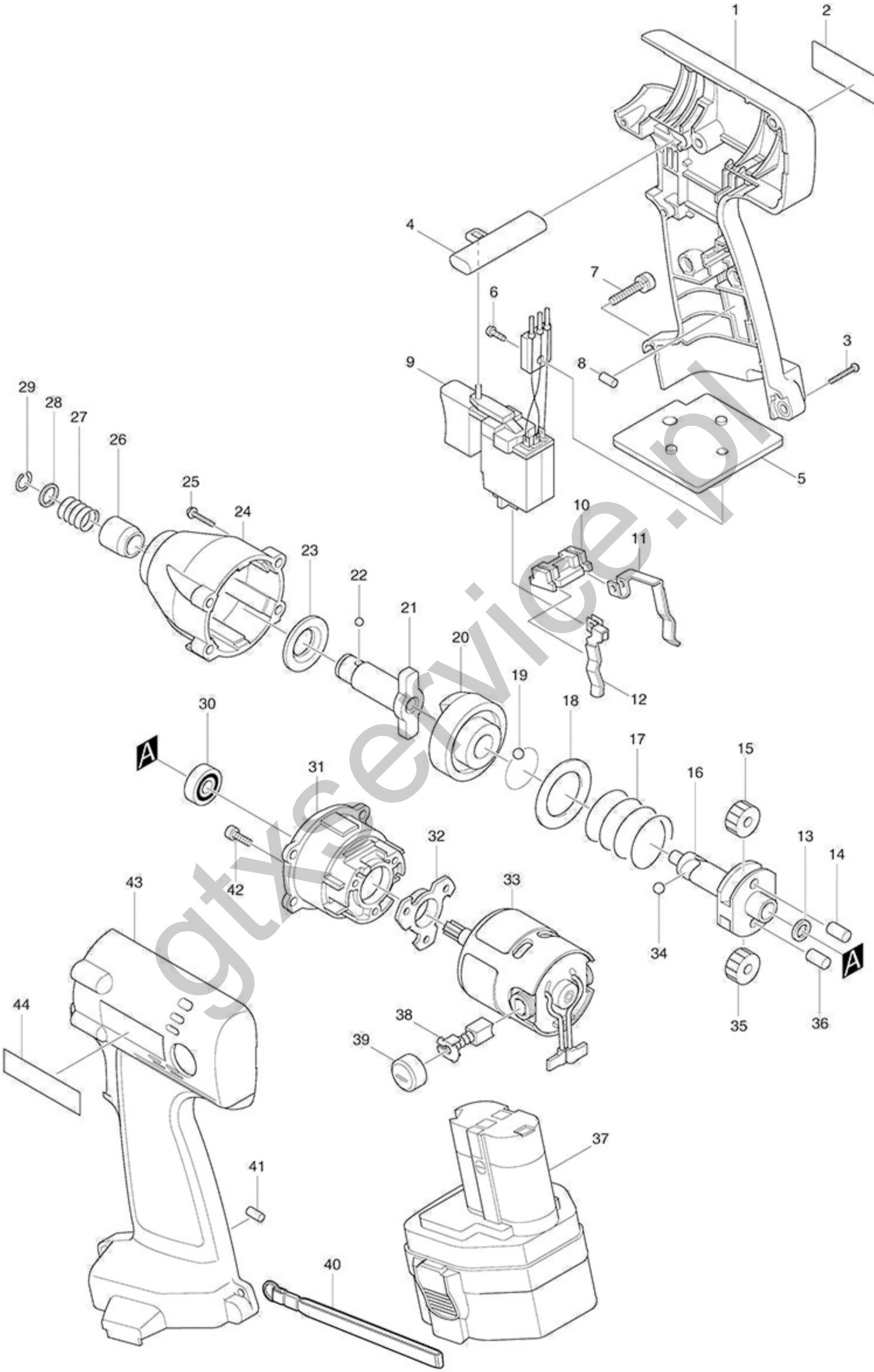

gtxservice.pl